TOWARDS GRAPHICAL CONFIGURATION INSIDE THE INTO-CPS APPLICATION

Christian Møldrup Legaard
Casper Thule
Peter Gorm Larsen

AARHUS UNIVERSITY
DEPARTMENT OF ENGINEERING

AGENDA

- Background
- Contribution and Demo
- Future Work
- Questions

BACKGROUND – MOTIVATION

System Engineering Course

Powerful tooling

Frustrating User interface

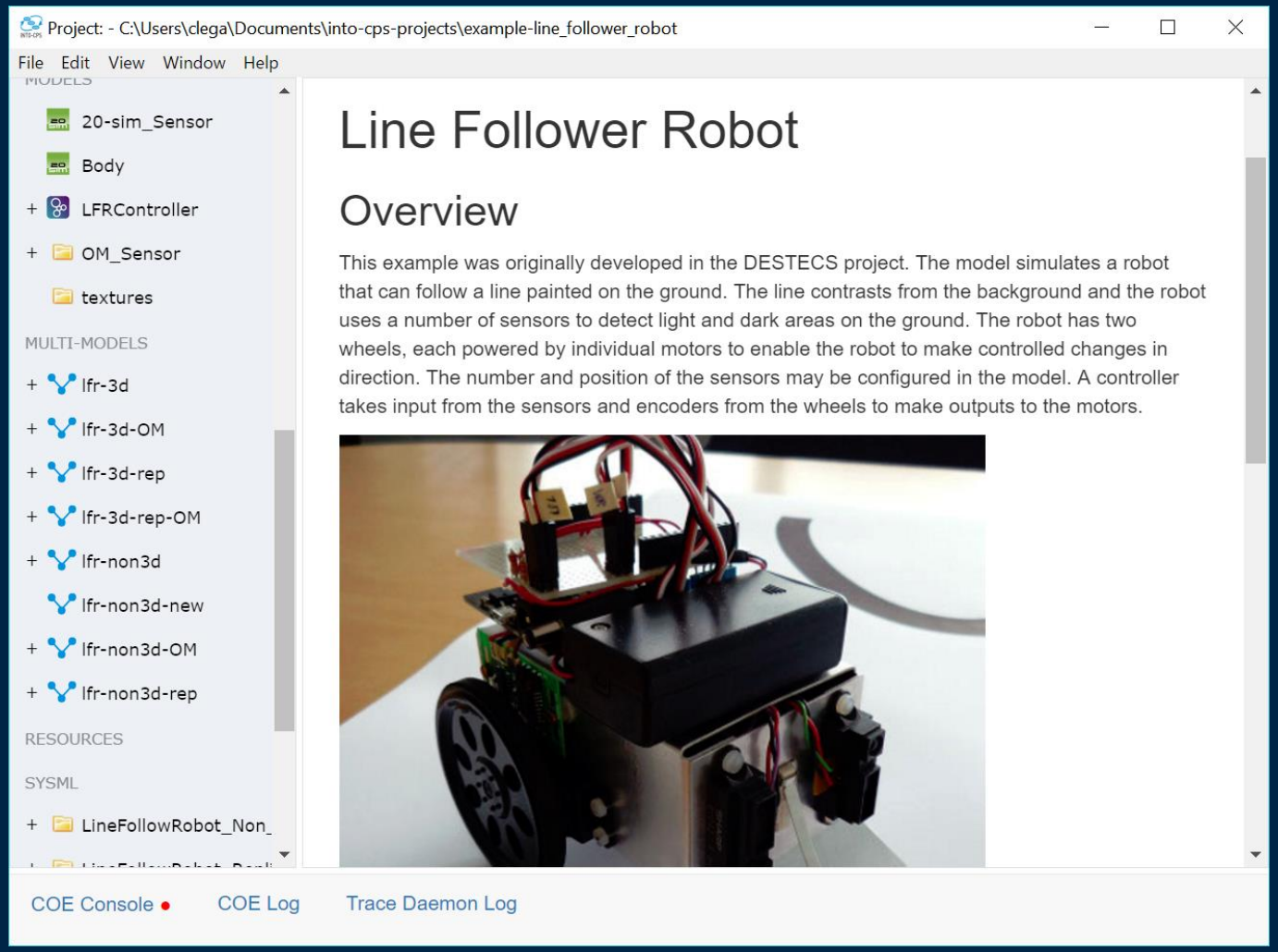

BACKGROUND – CONNECTIONS INSIDE APPLICATION

Gets the job done

Limited overview

Find un-connected port?

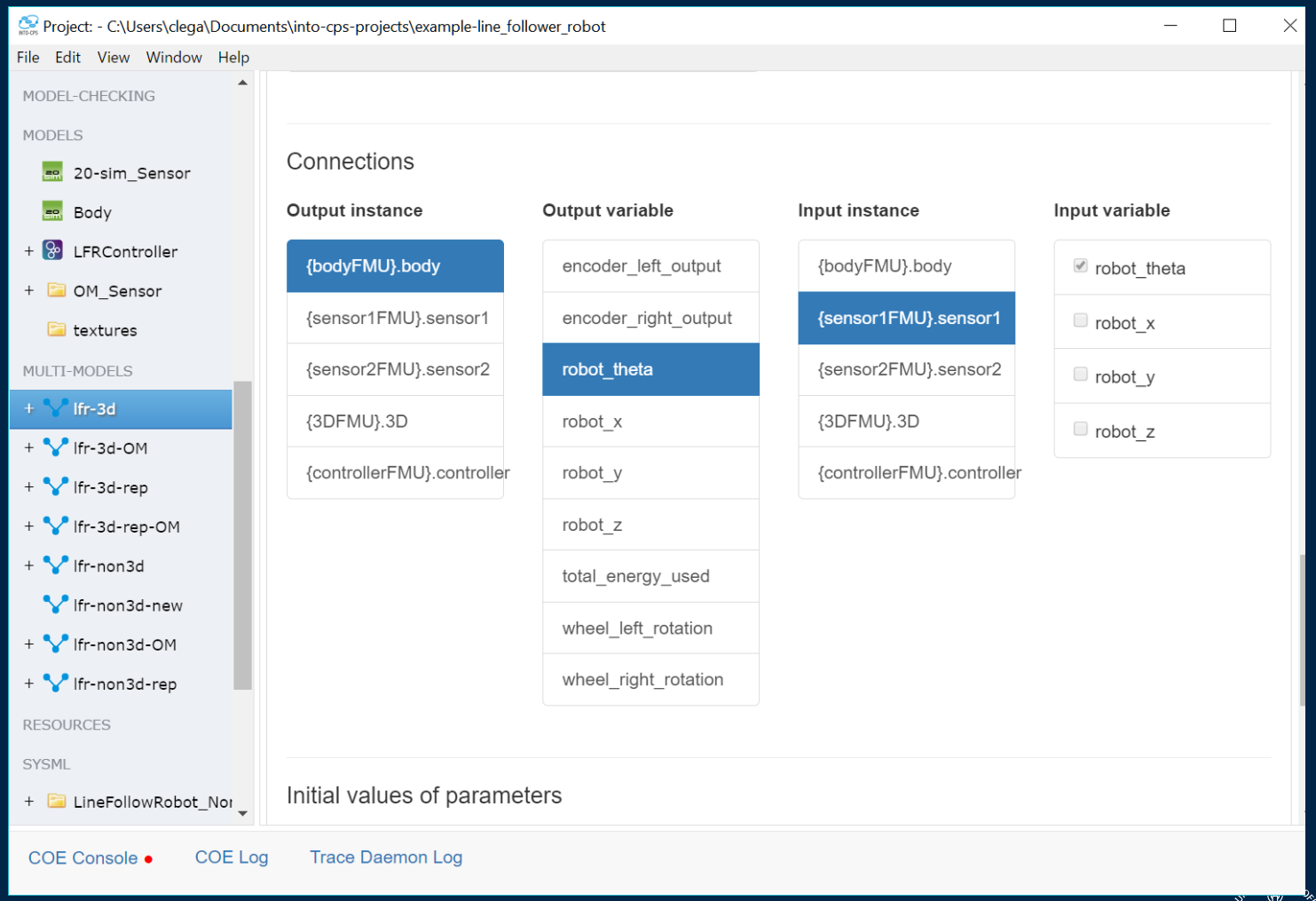

BACKGROUND – SYSML PROFILE

Better overview

Familiar experience

Ease of use?

External

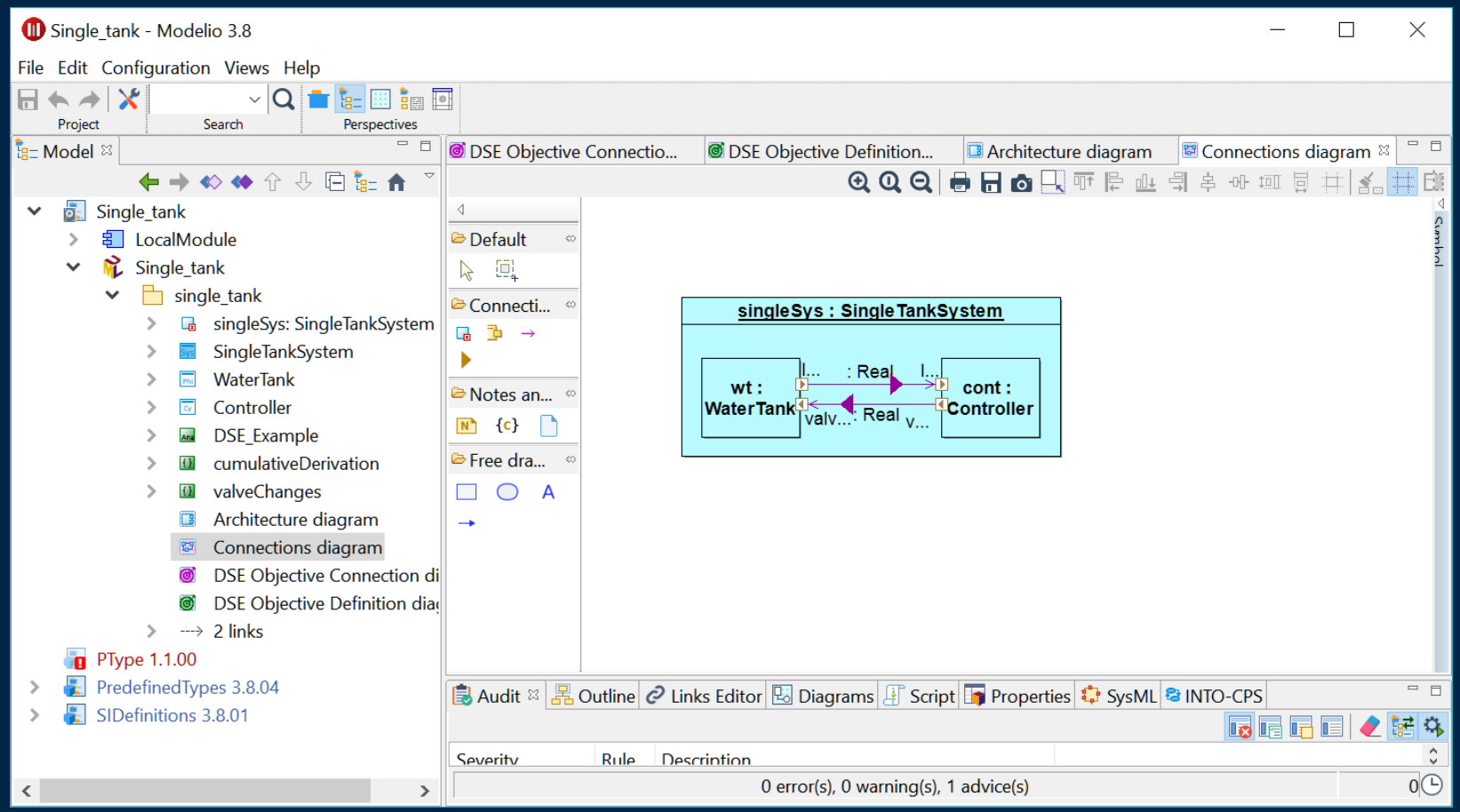

BACKGROUND – OTHER TOOLS

20Sim, OMEDIT, Simulink …

Integrated block-based design

Key difference to SysML profile?

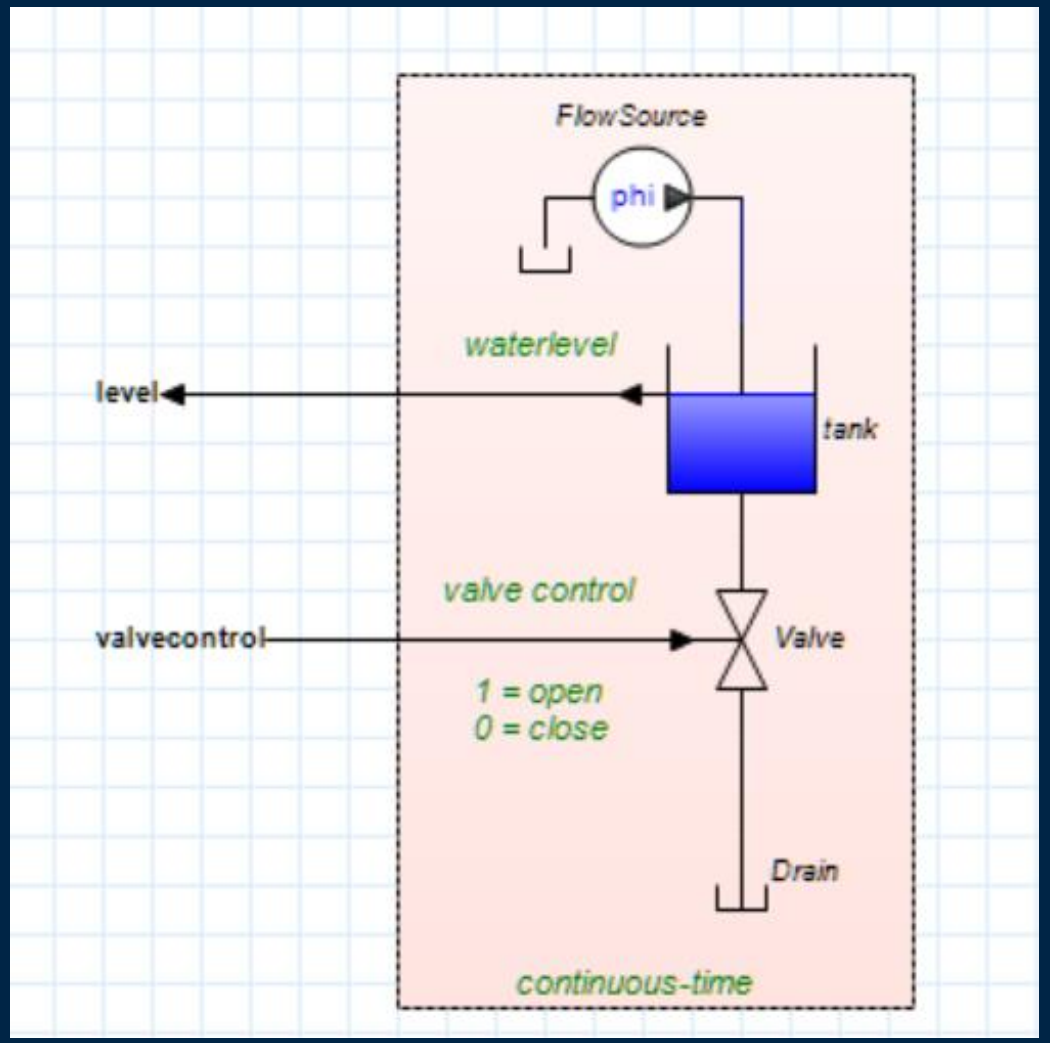

CONTRIBUTION – GRAPHICAL EDITOR

Integrated Block-based editor

Faster development loop

User assistance

Future proof

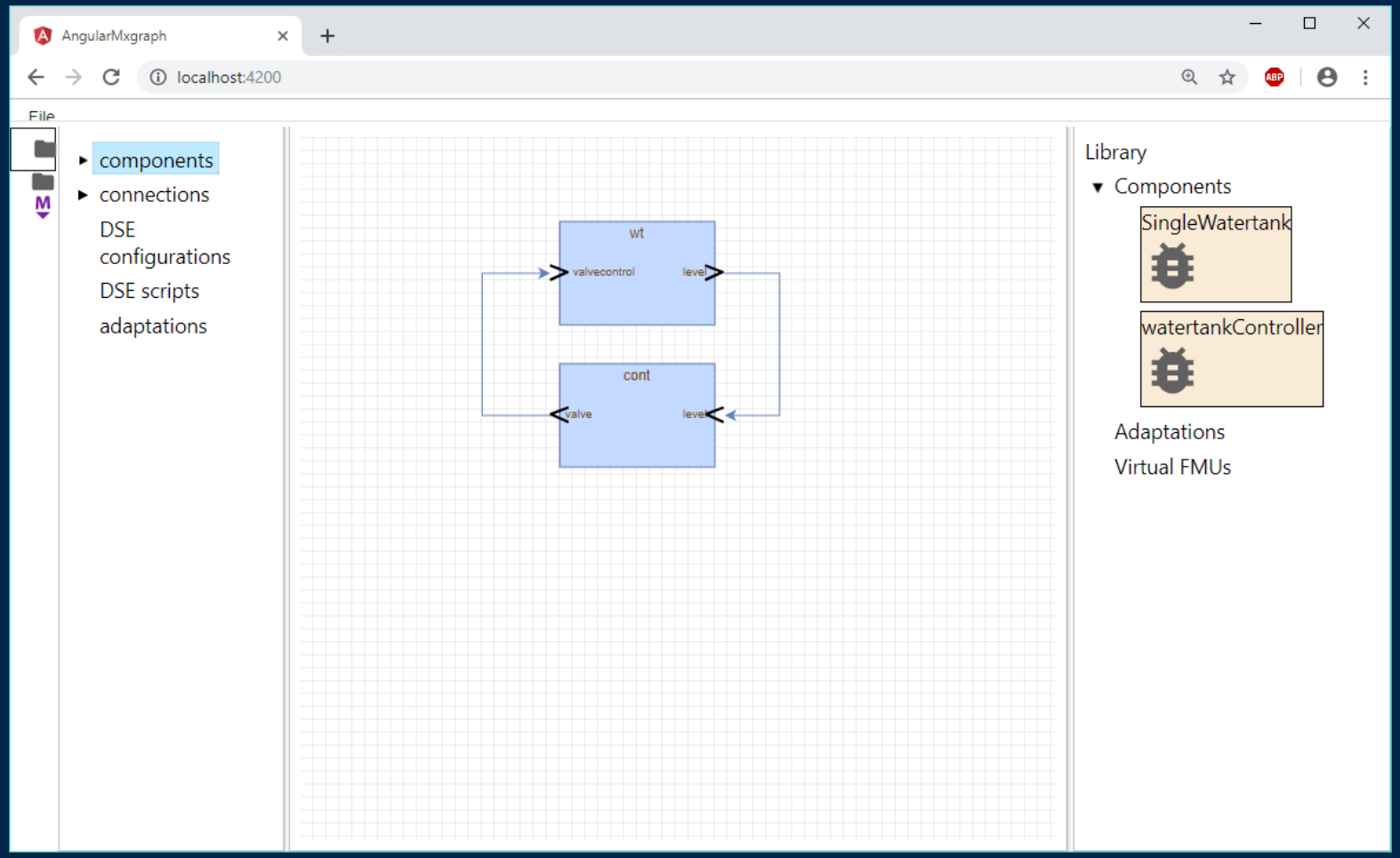

CONTRIBUTION – GRAPHICAL EDITOR

Project explorer

Canvas

Library

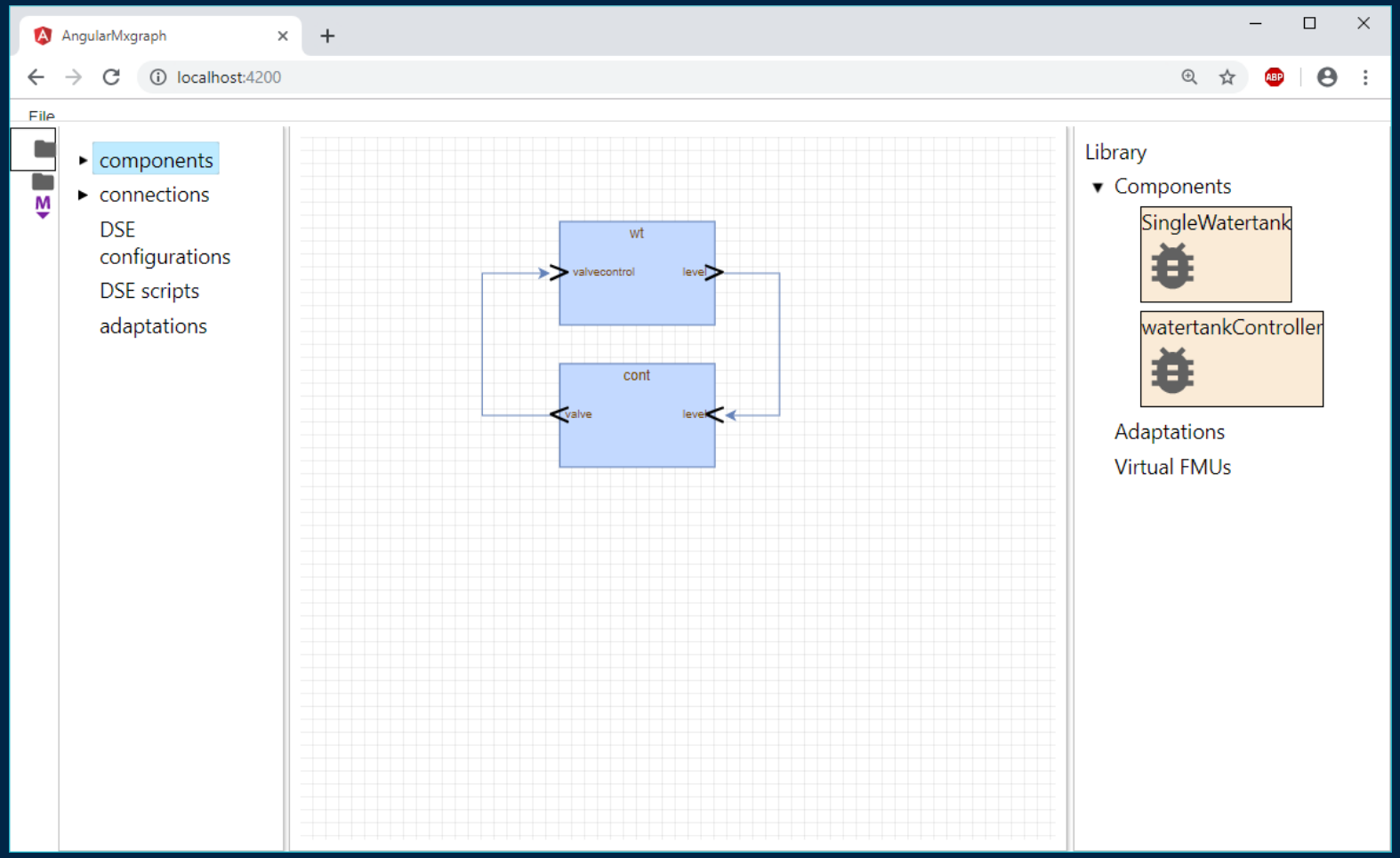

GRAPHICAL EDITOR – PROJECT EXPLORER

Abstract representation of system

Overview of hierarchy

Also shows artefacts not “drawable” on canvas

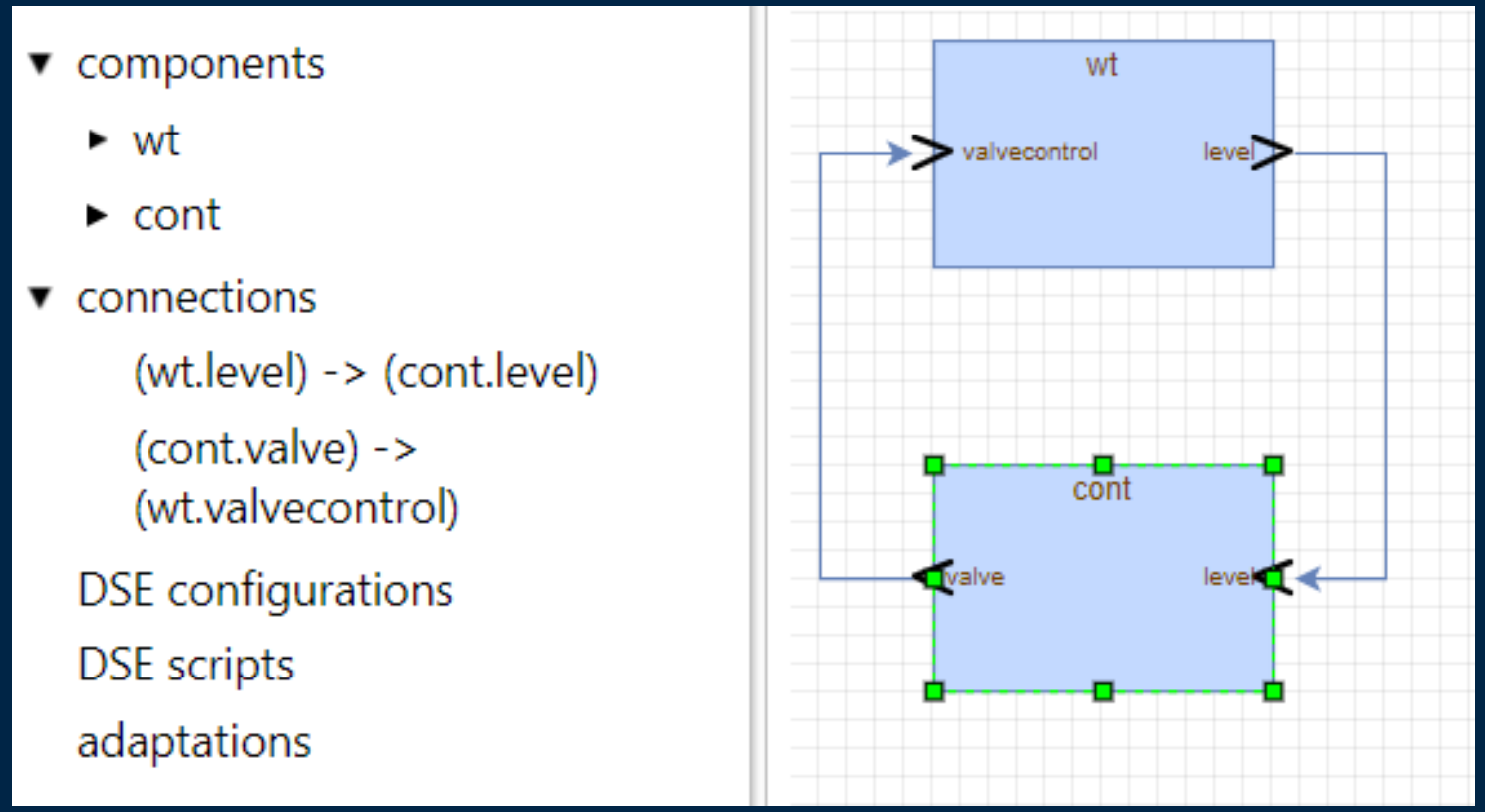

GRAPHICAL EDITOR – CANVAS

Drag connections

Double click to configure

Context menu

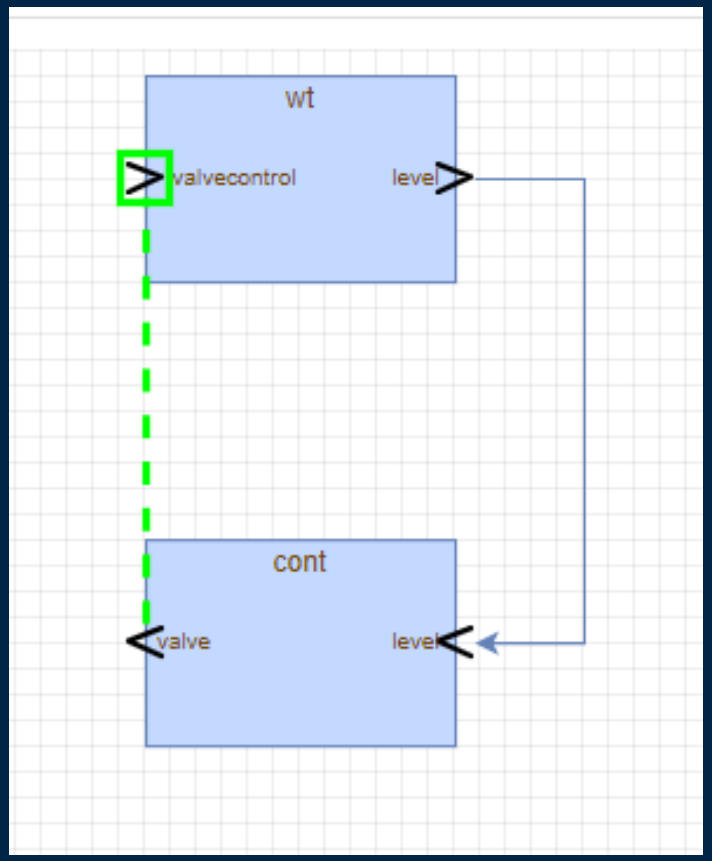

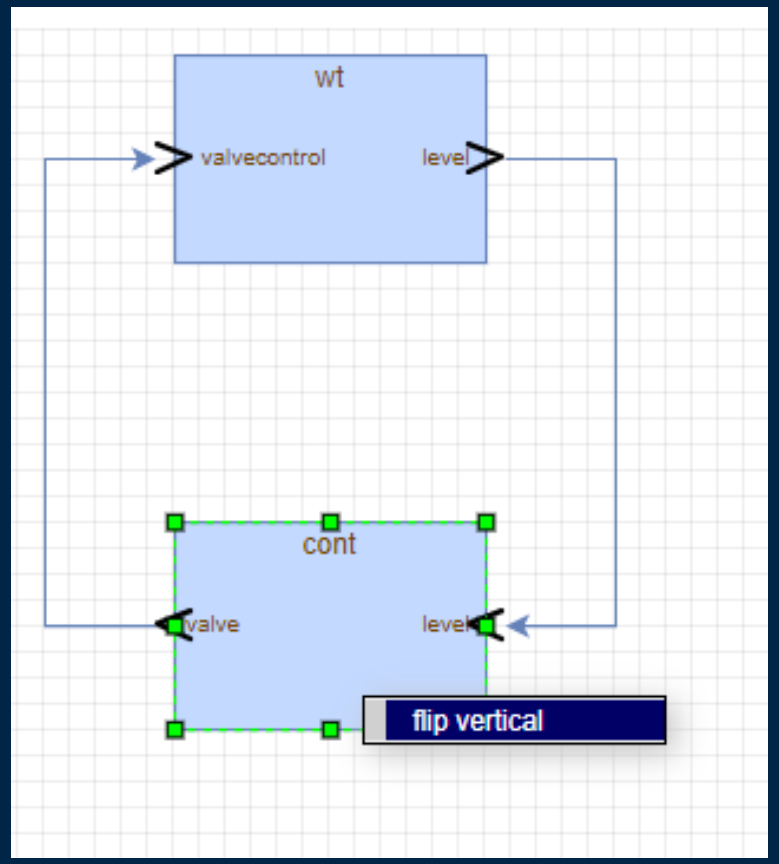

GRAPHICAL EDITOR – PARAMETERS

Configuration of system

Instance specific vs shared

Cooping with large number of parameters

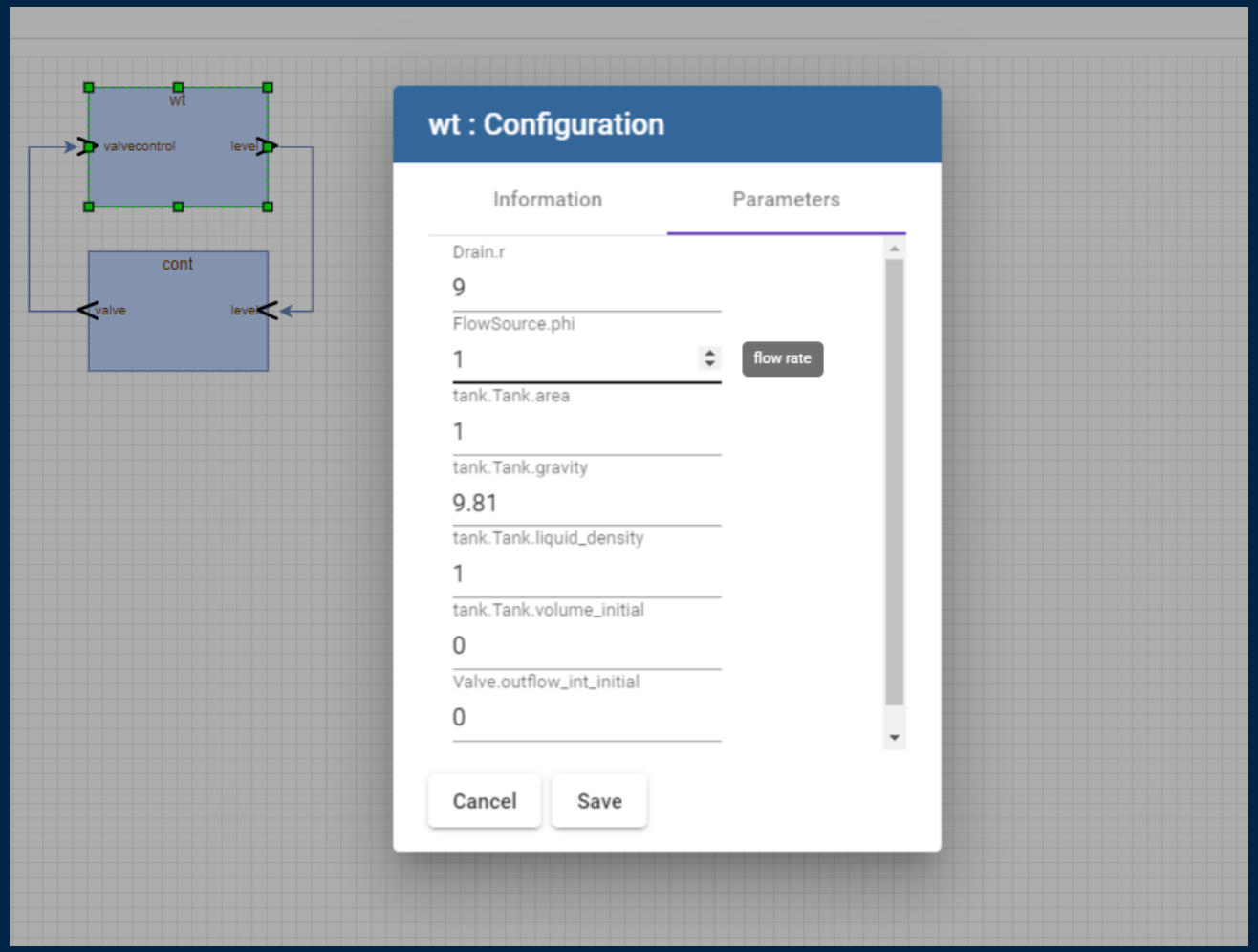

GRAPHICAL EDITOR – LIBRARY

Drag and Drop

Categories?

Potential sources?

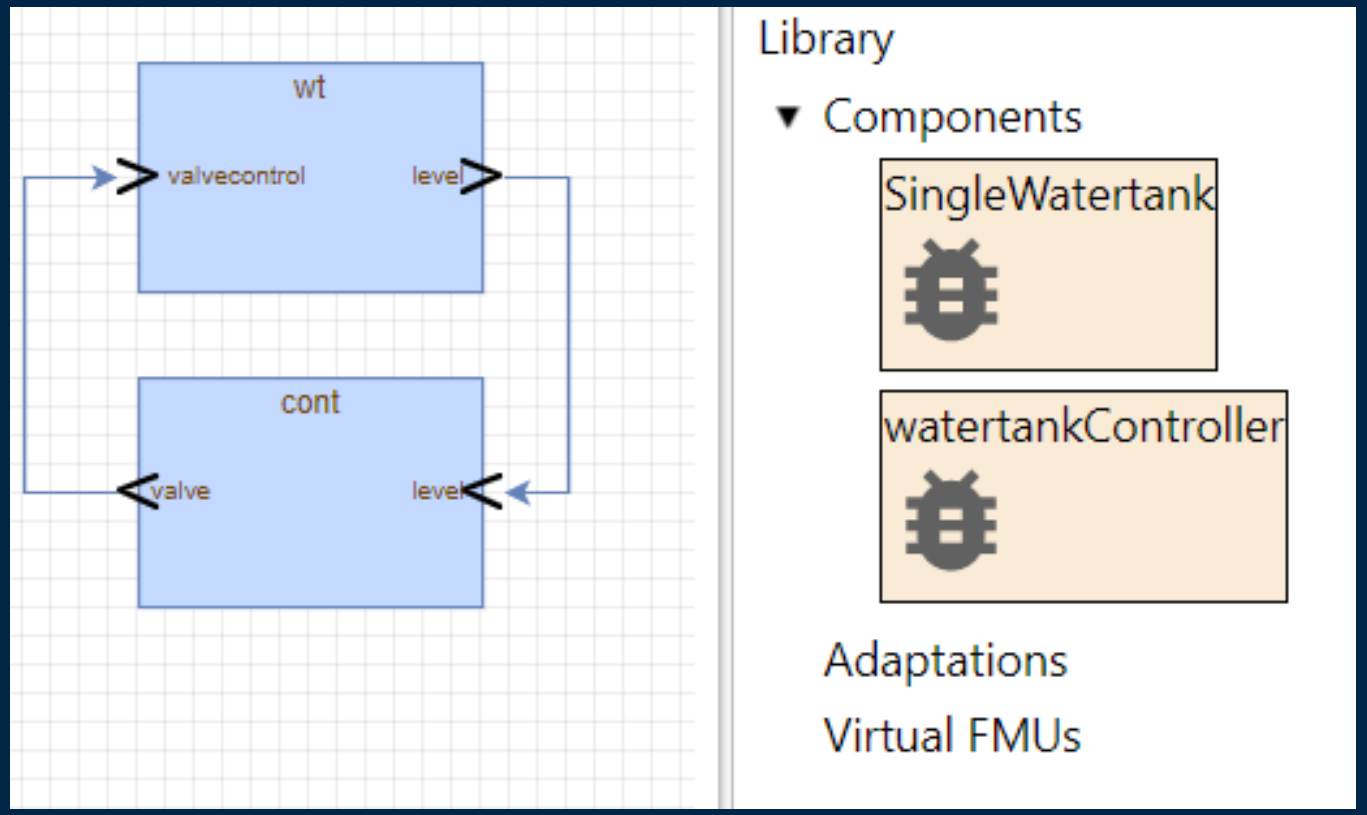

DEMO

EXCHANGE FORMAT – LOOKING FORWARD

Why is this relevant?

Current format

Future format

EXCHANGE FORMAT – CURRENT FORMAT

Simple JSON format

No geometry, shared parameters, hierarchy …

Requires drilling into the FMU archives

```
"{
    "fmus": {
        "{WaterTank}": "singlewatertank-20sim.fmu",
        "{Controller}": "watertankController-Standalone.fmu"
    },
    "connections": {
        "{WaterTank}.wt.level": [
            "{Controller}.cont.level"
        ],
        "{Controller}.cont.valve": [
            "{WaterTank}.wt.valvecontrol"
        ]
    },
    "parameters": {
        "{Controller}.cont.maxlevel": 2,
        "{Controller}.cont.minlevel": 1
    }
}"
```

EXCHANGE FORMAT – FUTURE

System Structure And Parameterization (SSP)

FMI and SSP

What is an component?

Extension Mechanisms

```
\---single_tank.ssp          : collection of multi models
    | SystemStructure.ssd    : default multi model
    | VarA.ssd               : alternative multi model
    | ParameterSet.ssv       : set of parameters
    | ParameterMappings.ssm  : binding params to instances
    | SignalDictionary.ssb   : mechanism to group signals
    |
    +---documentation
    | index.html
    |
    +---extra                : extra files extension mechanism
    |
    \---resources            : implementations of components
      WaterTank.fmu
      Controller.fmu
      subsystem.ssp          : potential subsystem
```

FUTURE WORK

Integration into application(s)

Exchange Format

Adaptations

Hierarchy

FUTURE WORK – SEMANTIC ADAPTATION

Fix mismatches

Wrapper

DSL vs graphical?

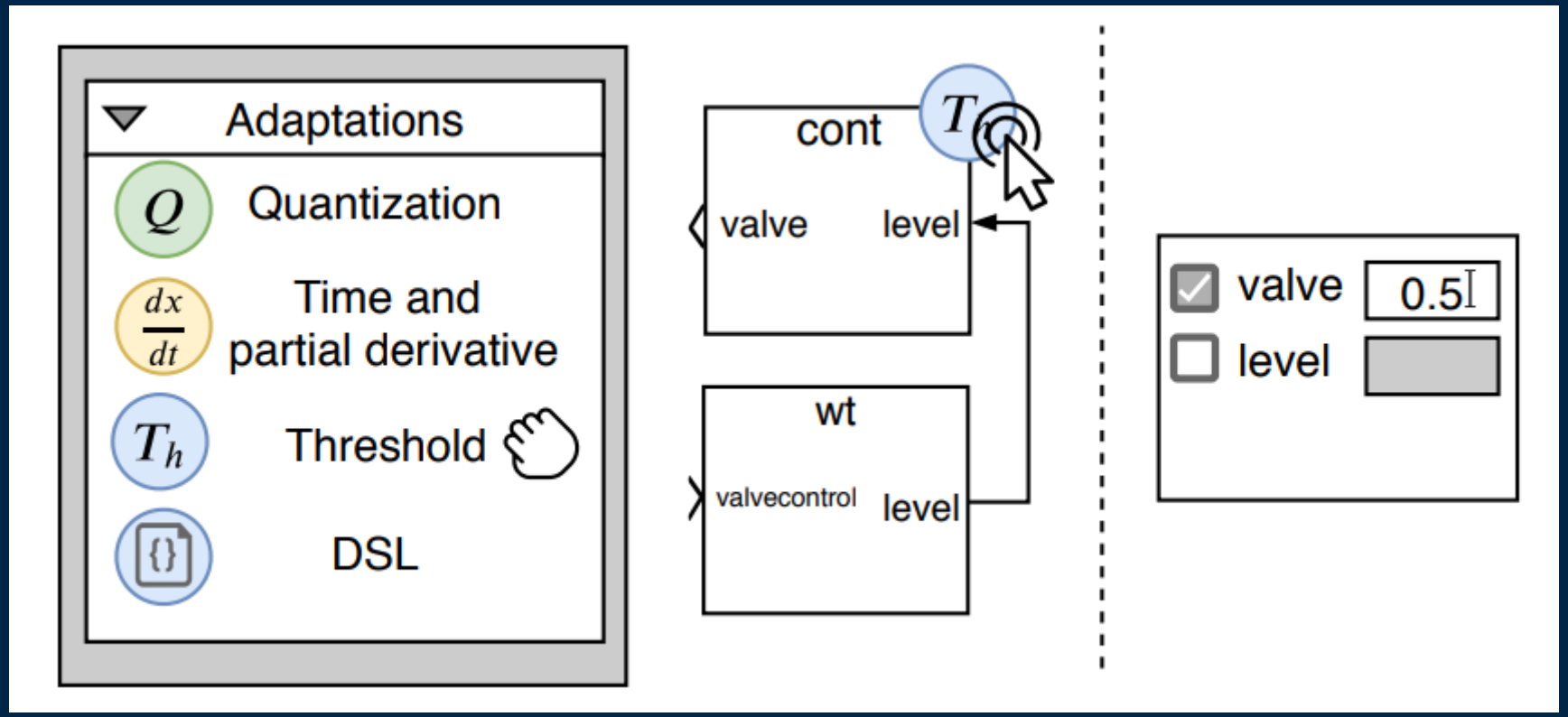

FUTURE WORK – HIERARCHY

Complexity Reduction

Relation to adaptations

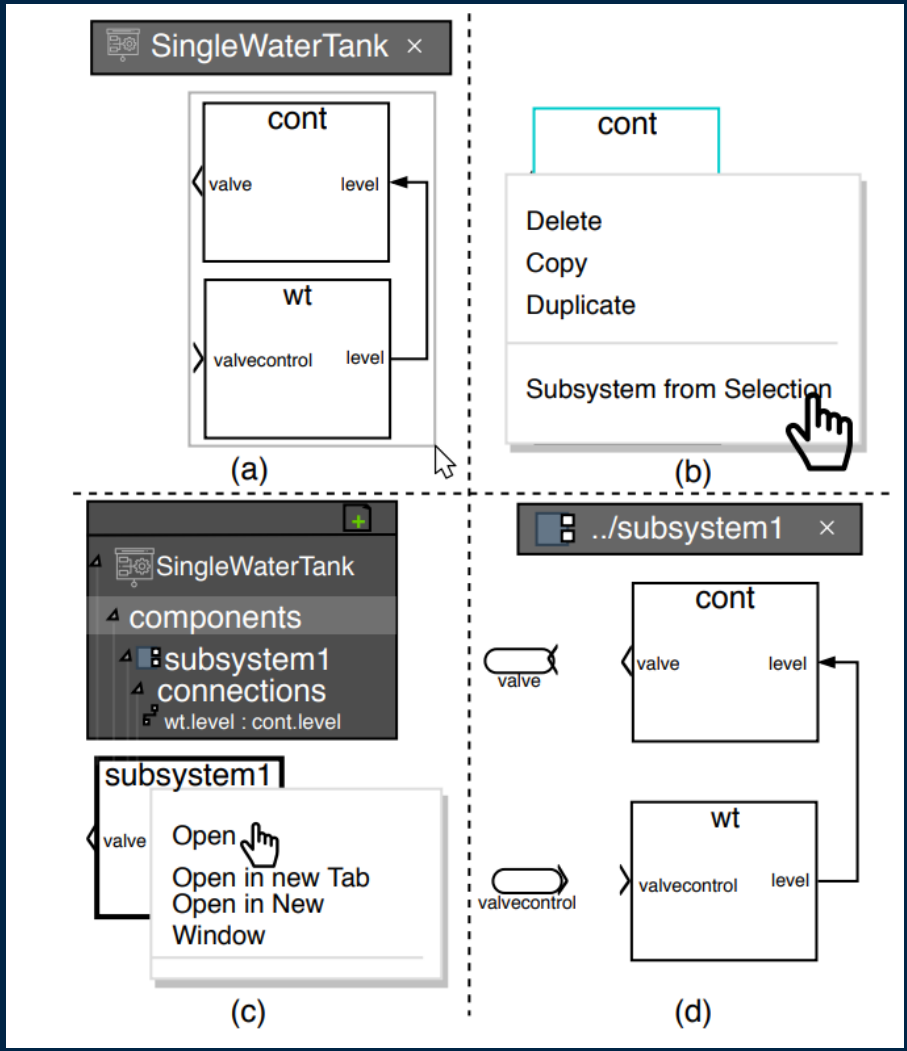

ACKNOWLEDGEMENTS

Poul Due Jensen Foundation

INTO-CPS Project/Association

System Structure and Parameterization

AARHUS
UNIVERSITY